Dopyt

TERMOČLÁNKY

Séria TC53

TC53-14371851
Termočlánok Type K 0-1260°C 10x6mm L=3m PTFE

- Teplota -40°C až 1200°C
- K, J, E, N, T
- Kabel PVC, Silicon, PTFE, Sklenené vlákno
- ATEX, IECEx, GOST

POPIS PRODUKTU

ŠPECIFIKÁCIA

Dĺžka kábla	3000 mm
Insertion length	10 mm
Materiál kábla	PTFE
Materiál kontaktnej časti	Nerezová oceľ 316Ti
Materials Panic Ring	Mosadz
Plug diameter	6 mm
Prevádzková teplota max.	1260 °C
Prevádzková teplota min.	0 °C
Temperature resistance of cable from	-50 °C
Temperature resistance of cable to	250 °C

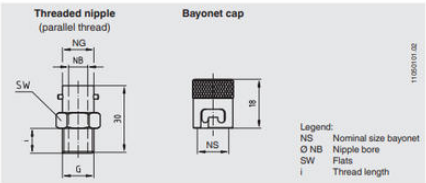

Bayonet cap fixed to the end of the spring (sheathed cable design)

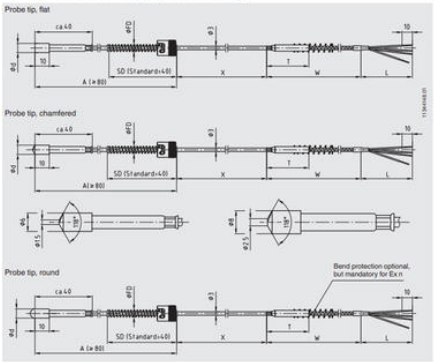

Legend:

Ø d	Probe diameter
L	Probe length
W	Cable length
Ø FD	Spring diameter
A	Insertion length
X	Probe extension
T	Transition sleeve
SD	Spring length

Bayonet cap adjustable on the spring (sheathed cable design)

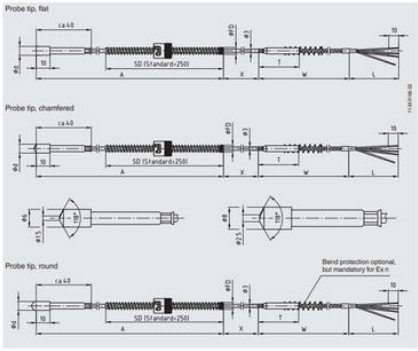

Legend:

Ø d	Probe diameter
L	Probe length
W	Cable length
Ø FD	Spring diameter
A	Insertion length
X	Probe extension
T	Transition sleeve
SD	Spring length

Bayonet cap adjustable on the spring (cable through to the probe tip)

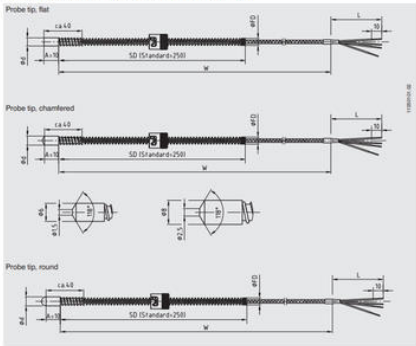

Legend:

Ø d	Probe diameter
L	Probe length
W	Cable length
Ø FD	Spring diameter
A	Insertion length
X	Probe extension
T	Transition sleeve
SD	Spring length